Market study

Trei loturi lângă lacul Frumușani

The land, its market and indicative prices by use

Three adjoining building lots by Lake Frumușani, suited to a small group of energy-efficient homes.

Total area	Lots	Indicative price, by use	Notary grid minimum
1,654 m²	3	€5–42 per m²	€12 per m²

Key points

- 1,654 m² over three adjoining intravilan lots, 25 km south-east of central Bucharest.
- Indicative price €32–42 per m² for building, in line with six recent listings nearby.
- Leading sustainable use: three energy-efficient family homes, after a building permit.
- About 300 m from the lake, at the edge of the village, on the road to Oltenița.
- Check utilities at the boundary and the land book before any offer.



The lots. Background map: Imagery © Esri, Maxar, Earthstar Geographics, and the GIS User Community · Roads and names: Esri, TomTom, Garmin, © OpenStreetMap contributors

Written for a buyer or investor

Date of the study: 9 November 2026

Contents

1. Scope of the study
2. The property
3. The market
4. Highest and best use
5. Prices
6. Opportunities and checks
7. Conclusions
8. Limitations and sources

1. Scope of the study

1.1 Purpose

This study describes the land in this project, the market around it and the uses it could serve, with an indicative price range for each use. It was prepared to help a buyer or investor decide whether to buy, and at what price.

1.2 What the prices mean

The prices are indicative ranges in euro per square metre, for the land as it is, bought or sold for a given use. They start from the asking prices of similar land nearby, adjusted for the differences, with the notary grid as a floor. They are not a market value in the sense of the valuation standards.

1.3 The property

The study covers the lots below, as identified in the cadastral documents held by the agency.

Lot	Commune or town	Area	Land use	Intravilan	Encumbrances
Lot 1	Frumușani	604 m²	Arable land	Yes	None
Lot 2	Frumușani	600 m²	Arable land	Yes	None
Lot 3	Frumușani	450 m²	Yard and buildings	Yes	None

1.4 Dates

The information was collected and the study written on 9 November 2026. Listings change quickly: the further from this date, the less the prices can be relied on.

1.5 Sources and depth of research

Listings come from public real estate portals (such as imobiliare.ro, storia.ro and olx.ro), notary values from the market study of the relevant chamber of notaries, and economic data from the National Bank of Romania and other public sources. The information was cross-checked where possible. The land was not inspected. Every source is listed, with its link, in chapter 8.

1.6 Assumptions

- The facts about the land (area, boundary, land use, intravilan status, encumbrances) are as recorded in the cadastral documents.
- The land complies with all the laws, regulations and permits that apply to it, and any permit a use needs could be obtained or transferred without unusual cost or delay.
- There is no contamination, archaeological find or other hidden condition that would limit the uses described.
- Listing prices are asking prices; final sale prices are usually lower.
- On the maps, a boundary can sit a metre or two from its true position. The legal boundary is the one in the cadastral documents.

1.7 Standards

This is an indicative market study, not a valuation report. In Romania, a valuation report stating a market value can only be signed by a valuer authorised by ANEVAR, following the valuation standards (SEV). For a mortgage, a court case, or an accounting or tax purpose, commission such a valuation.

1.8 Confidentiality

The study is for the person it was prepared for, and for the purpose above. It should not be relied on by others, or for other purposes.

1.9 Currency

Prices are in euro (EUR), the currency land in Romania is usually priced in. Amounts in lei were converted at the National Bank of Romania's reference rate of 5.0822 lei to the euro on 25 September 2026.

1.10 Taxes and fees

The taxes and fees on a sale (the seller's income tax, the notary's and the land registry's fees) are worked out on the agreed price, but never on less than the notary grid value. They are not included in the prices here; a notary can say exactly how much they will be.

2. The property

2.1 Location



Where the land is. Background map: Imagery © Esri, Maxar, Earthstar Geographics, and the GIS User Community · Roads and names: Esri, TomTom, Garmin, © OpenStreetMap contributors

The lots are on the northern side of Frumușani, a village in Călărași county about 25 km south-east of central Bucharest, near Lake Frumușani [13].

The area is part of Bucharest's outer commuter belt: most new houses are bought by families who work in the city.

Nearest towns

Town	Distance
Frumușani	0.9 km
Oltenița	34 km
Bucharest (centre)	25 km

2.2 Access and utilities

The lots are reached from a village street that joins the main road to Oltenița. Utilities run along the main road; whether they reach the lots' boundary was not confirmed.

2.3 The lots

Three adjoining intravilan lots of 604, 600 and 450 m², together 1,654 m². Lots 1 and 2 are recorded as arable land and Lot 3 as yards and buildings. Encumbrances have not been checked yet.

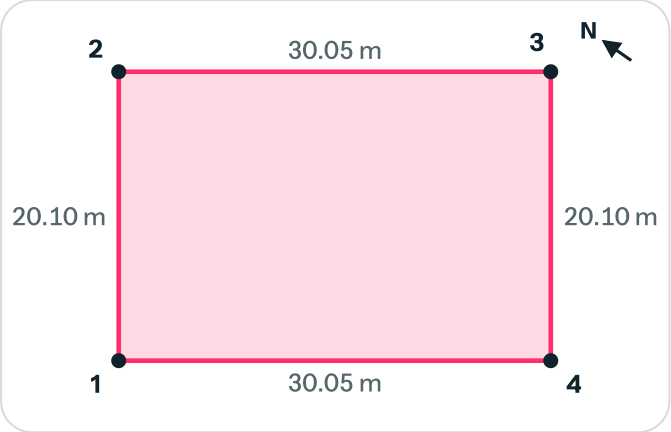

Lot 1 · 604 m²

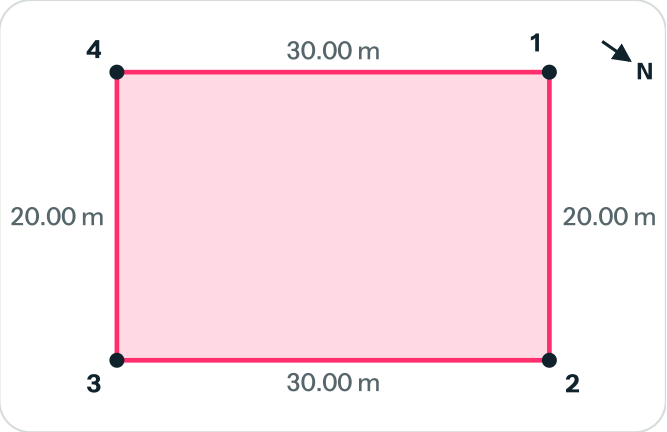

Lot 2 · 600 m²



Lot 3 · 450 m²

2.4 Planning and environment

The local plan places the area in the low-rise residential zone, up to two floors [13]. Building on Lots 1 and 2 is possible within that zone without a PUZ; a certificate of urbanism confirms the details.

3. The market

3.1 The economy

Inflation eased to about 5% in 2026 and mortgage rates stayed near 7% [12]. Borrowing costs still limit what first-time buyers can pay.

3.2 The investment market

Around Bucharest, investors favour small residential projects and energy-efficient homes, which sell faster than older stock [11].

3.3 The land market

Asking prices for building plots on Bucharest's south-eastern edge rose by about 8% in the year to spring 2026 [11]. Plots near the lake ask more than those further out.

3.4 The notary grid

The 2026 notary grid sets €12 per m² for intravilan land in this part of Frumușani, and 4.50 lei per m² (about €0.89) for extravilan arable land [1]. These are minimums used for taxes, not prices.

Row	Type	As printed	EUR per m²	Year	Source
Frumușani, intravilan, zone B	Intravilan	12 EUR/m²	€12	2026	[1]
Frumușani, extravilan arable	Extravilan	4.50 RON/m²	€0.89	2026	[1]

3.5 Similar land for sale

Nine listings were found within 12 km: seven intravilan and two extravilan [2][3][4][5][6][7][8][9][10]. The closest building plots ask €34 to €48 per m²; plots further away or larger ask less.

The lots are smaller than most listings and closer to the lake, which supports the upper part of the range, but their utilities are unconfirmed, which pulls it down.

9 listings, from €2.79 to €48 per m². The middle half ask between €22 and €42; the median is €35.

Price per m²: similar land for sale, and the indicative range for each use

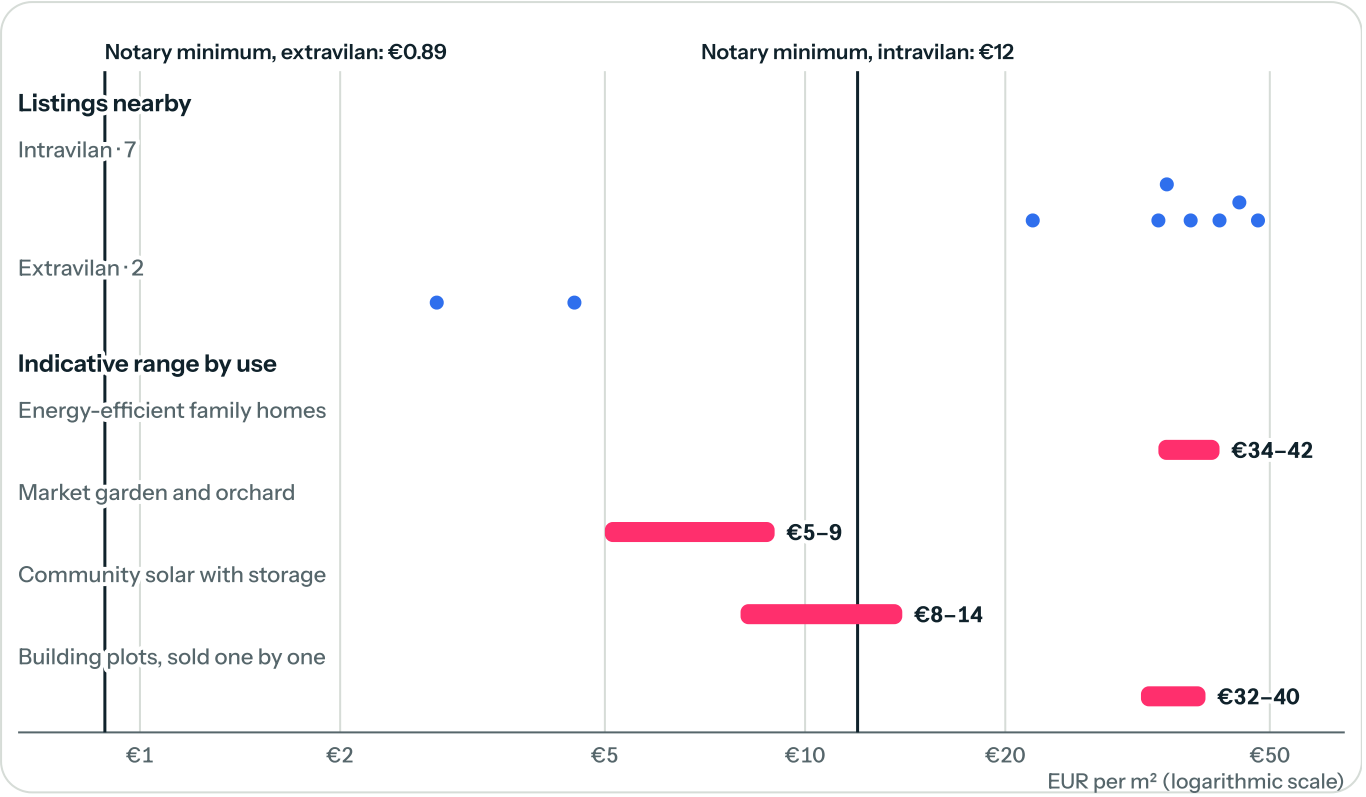

#	Listing	Place	km	Area (m²)	Asking price	EUR per m²	Type	Date	Source
1	Building plot, utilities at the boundary	Frumușani	0.8	500	17,500 EUR	**€35**	Intravilan	10/09/2026	[2]
2	Intravilan land near the lake	Frumușani	1.6	1,200	54,000 EUR	**€45**	Intravilan	28/08/2026	[3]
3	Plot on an asphalt road	Pasărea	6.5	700	29,400 EUR	**€42**	Intravilan	02/09/2026	[4]
4	Land with 20 m frontage	Fundeni	9.8	2,000	44,000 EUR	**€22**	Intravilan	19/07/2026	[5]
5	Building land in the centre	Frumușani	1.1	450	21,600 EUR	**€48**	Intravilan	15/09/2026	[6]
6	Plot with all utilities	Căldăraru	7.2	1,000	38 EUR/m²	**€38**	Intravilan		[7]
7	Arable land outside the village	Frumușani	2.4	5,000	22,500 EUR	**€4.50**	Extravilan	30/06/2026	[8]
8	Arable land, 1 ha	Plătărești	12	10,000	142,000 RON	**€2.79**	Extravilan	05/08/2026	[9]
9	Plot on a new residential street	Frumușani	0.5	800	27,200 EUR	**€34**	Intravilan	20/09/2026	[10]

4. Highest and best use

Building is legally permitted and physically possible, and it is the most valuable use. Among building uses, a small group of energy-efficient homes is financially feasible and does the most for the community and the climate, so it is the highest and best use here. A market garden would do even more for nature but is worth much less.

The uses are ordered with those that do most for the environment and the community first. SDGs are the UN Sustainable Development Goals each use supports.

1. Energy-efficient family homes — **€34–42 per m²**

● Strong benefit to people and nature · After permits

SDG 7 Affordable and clean energy · **SDG 11** Sustainable cities and communities · **SDG 13** Climate action

2. Market garden and orchard — **€5–9 per m²**

● Strong benefit to people and nature · Possible now

SDG 2 Zero hunger · **SDG 12** Responsible consumption and production · **SDG 15** Life on land

3. Community solar with storage — **€8–14 per m²**

● Some benefit to people and nature · After permits

SDG 7 Affordable and clean energy · **SDG 13** Climate action

4. Building plots, sold one by one — **€32–40 per m²**

● Conventional use · Possible now

5. Prices

5.1 Method

Of the three usual approaches to land (market, income and cost), only the market approach applies here: the land is held for later use and earns no income of its own. It was applied by direct comparison: similar land offered for sale nearby was compared with this land, and the differences in location, size, access, utilities, land type and category were weighed to arrive at a range per m². The notary grid was used as a floor.

5.2 Indicative prices by use

Use	When	EUR per m²	For the whole area
Energy-efficient family homes	After permits	**€34–42**	€56,200–69,500
Market garden and orchard	Possible now	**€5–9**	€8,270–14,900
Community solar with storage	After permits	**€8–14**	€13,200–23,200
Building plots, sold one by one	Possible now	**€32–40**	€52,900–66,200

Notary grid minimum: €12 per m²

For building, the indicative range is €32–42 per m², well above the notary floor of €12. For a market garden or community solar, the land is worth €5–14 per m².

6. Opportunities and checks

Energy-efficient family homes

€34–42 per m²

≈ €56,200–69,500 for 1,654 m²

SDG 7 Affordable and clean energy

SDG 11 Sustainable cities and communities

SDG 13 Climate action

The three lots together fit a small group of low-energy houses, a type buyers from Bucharest increasingly ask for.

What it takes
A building permit for each house; the local plan allows two floors.

Risks
Building costs rose in 2026 and could narrow the margin.

How the price was set
Based on nearby building plots, with a small premium for a planned group.

● Strong benefit to people and nature · After permits

Market garden and orchard

€5–9 per m²

≈ €8,270–14,900 for 1,654 m²

SDG 2 Zero hunger

SDG 12 Responsible consumption and production

SDG 15 Life on land

Good soil and water from the lake area suit vegetables and fruit trees for local markets.

What it takes
No permit to farm; a well or irrigation would need approval.

Risks
Intravilan land is worth more for building, so this use earns less per m².

How the price was set
Between farmland prices and the notary floor for building land.

● Strong benefit to people and nature · Possible now

Community solar with storage

€8–14 per m²

≈ €13,200–23,200 for 1,654 m²

SDG 7 Affordable and clean energy

SDG 13 Climate action

A small array could supply neighbouring homes, sharing the savings with the village.

What it takes
A grid connection approval and a building permit for the array.

Risks
Grid capacity in the area is not confirmed.

How the price was set
Tied to what a solar lease could pay, below building land.

● Some benefit to people and nature · After permits

Building plots, sold one by one

€32–40 per m²

≈ €52,900–66,200 for 1,654 m²

Each lot can be sold on its own as a plot for one house.

What it takes
None beyond a normal sale.

Risks
Three similar plots on the market at once can slow the sale.

How the price was set
Direct comparison with the nearest intravilan listings.

● Conventional use · Possible now

Check before buying

- [ ] Get a land book extract for each lot and check for encumbrances.
- [ ] Ask the town hall for a certificate of urbanism for the intended use.
- [ ] Confirm water, power and gas at the lots' boundary.
- [ ] Check that the access road is public and passable all year.

7. Conclusions

The lots are best used together for a small group of energy-efficient homes, at €34–42 per m². Sold one by one as building plots, they would ask €32–40 per m². The notary floor is far below both. Utilities and the land book should be checked first.

What could not be verified

Only asking prices were found; final sale prices are usually lower. Utilities at the boundary were not confirmed.

8. Limitations and sources

This study was prepared with the help of AI (Claude, by Anthropic) from public information found online on 9 November 2026, and read by the agency before it was shared. The information was cross-checked where possible, but its accuracy cannot be guaranteed; errors reported to us will be corrected.

It is not a valuation report, legal advice or a planning opinion. Before a transaction, check the land book extract (extras de carte funciară), ask the town hall for a certificate of urbanism (certificat de urbanism) for the intended use, and consider a valuation by an ANEVAR-authorised valuer.

Confidence in the data: medium

Sources

[1] **Market study of minimum values 2026, Călărași county**
Chamber of notaries (sample) · Notary grid
example.com/notary-grid-calarasi-2026.pdf

[2] **Building plot 500 m², Frumușani, utilities at the boundary**
Listing site (sample) · Listing
example.com/listing/frumusani-500

[3] **Intravilan land 1,200 m², Frumușani, near the lake**
Listing site (sample) · Listing
example.com/listing/frumusani-lake-1200

[4] **Plot 700 m², Pasărea, asphalt road**
Listing site (sample) · Listing
example.com/listing/pasarea-700

[5] **Land 2,000 m², Fundeni, 20 m frontage**
Listing site (sample) · Listing
example.com/listing/fundeni-2000

[6] **Building land 450 m², Frumușani centre**
Listing site (sample) · Listing
example.com/listing/frumusani-centre-450

[7] **Plot 1,000 m², Căldăraru, all utilities**
Listing site (sample) · Listing
example.com/listing/caldararu-1000

[8] **Arable land 5,000 m², outside Frumușani**
Listing site (sample) · Listing
example.com/listing/frumusani-arable-5000

[9] **Extravilan arable 1 ha, Plătărești**
Listing site (sample) · Listing
example.com/listing/platare%C8%99ti-1ha

[10] **Plot 800 m², Frumușani, new residential street**
Listing site (sample) · Listing
example.com/listing/frumusani-800

[11] **Regional land market report, spring 2026**
Real estate consultancy (sample) · Market
example.com/land-market-2026

[12] **Inflation and interest rates, 2026 update**
Central bank (sample) · Economy
example.com/economy-2026

[13] **Local plan (PUG) summary, Frumușani**
Town hall (sample) · Planning
example.com/pug-frumusani

· **National Bank of Romania: reference exchange rate, 25 September 2026**
www.bnr.ro/nbrfxrates.xml

Privim is a service of Zotario VOF · Noordeinde 32C, 2611 KJ Delft, the Netherlands (postal address, no visits) · KVK 42198274 · VAT NL870141600B01 · contact@zotario.com · Terms · Privacy · Cookies